Machine structurally designed and verified by FEA to give high accuracy at the cutting point.

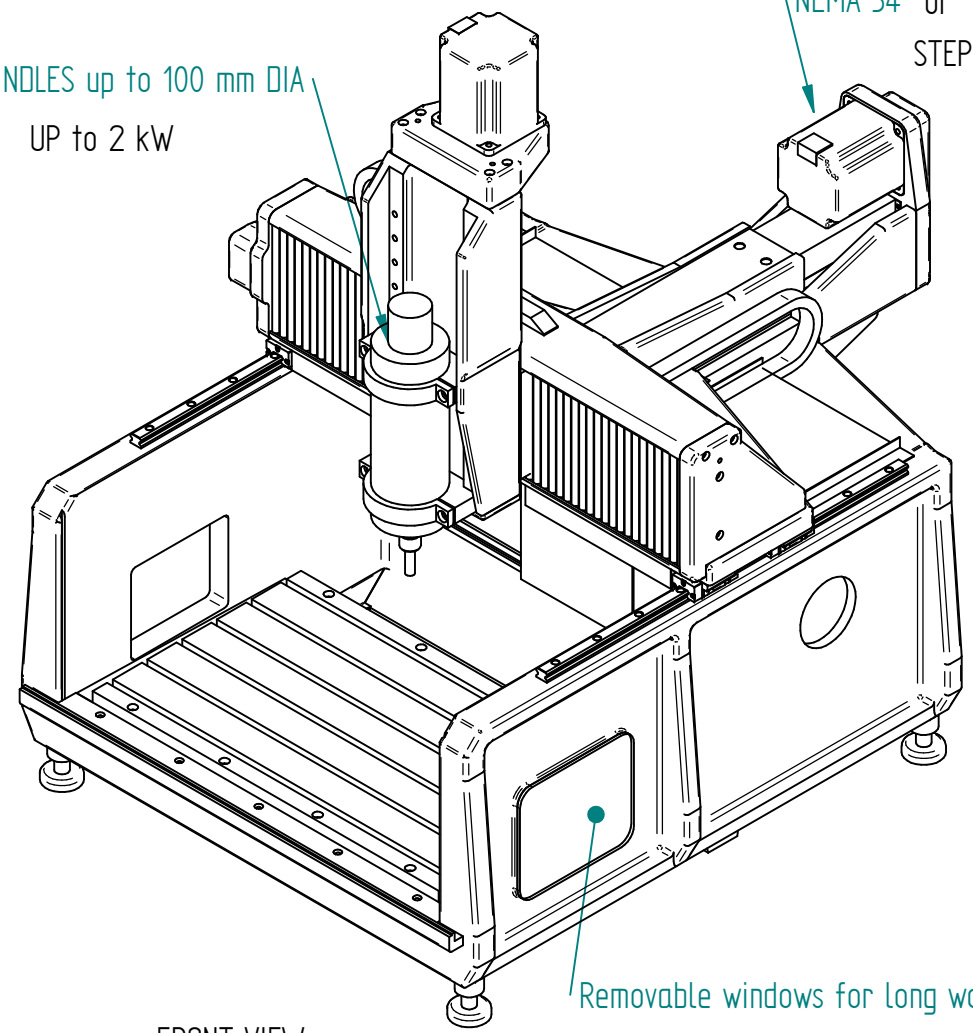

FRONT VIEW

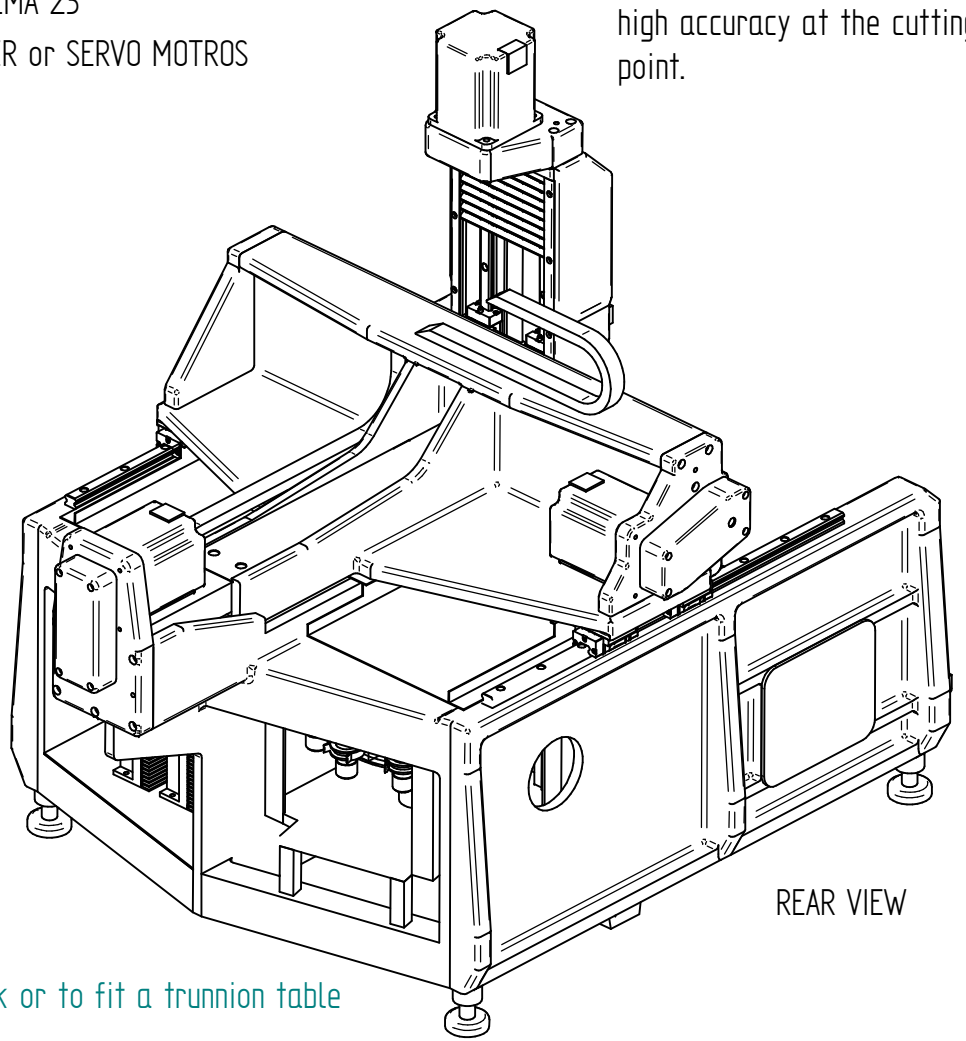

REAR VIEW

PRECISION GROUND 14x4 mm UP TO 16x5 BALLSCREWS
PRECISION 15x15 LINEAR GUIDES
AUTOMATIC TOOLCHANGER (10 ISO 20 tools)
5-AXiS CAPABILITY with TRUNNION TABLE

WORKSPACE 400x300x200 mm high.

Copyright 2018 RJduPreez rudy@asmsa.co.za

TITLE	MINI MILL	REV 7
FILE NAME: Mini-Mill-asm.dft	DRAWN	RdP
SCALE:	WEIGHT:	SHEET 1 OF 7

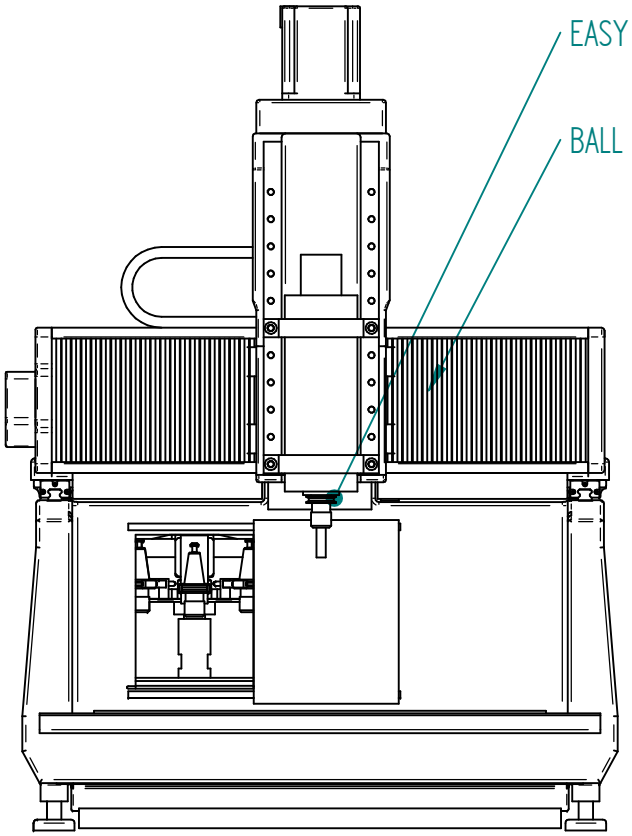

FRONT VIEW

WORK HEIGHT 200-230 mm

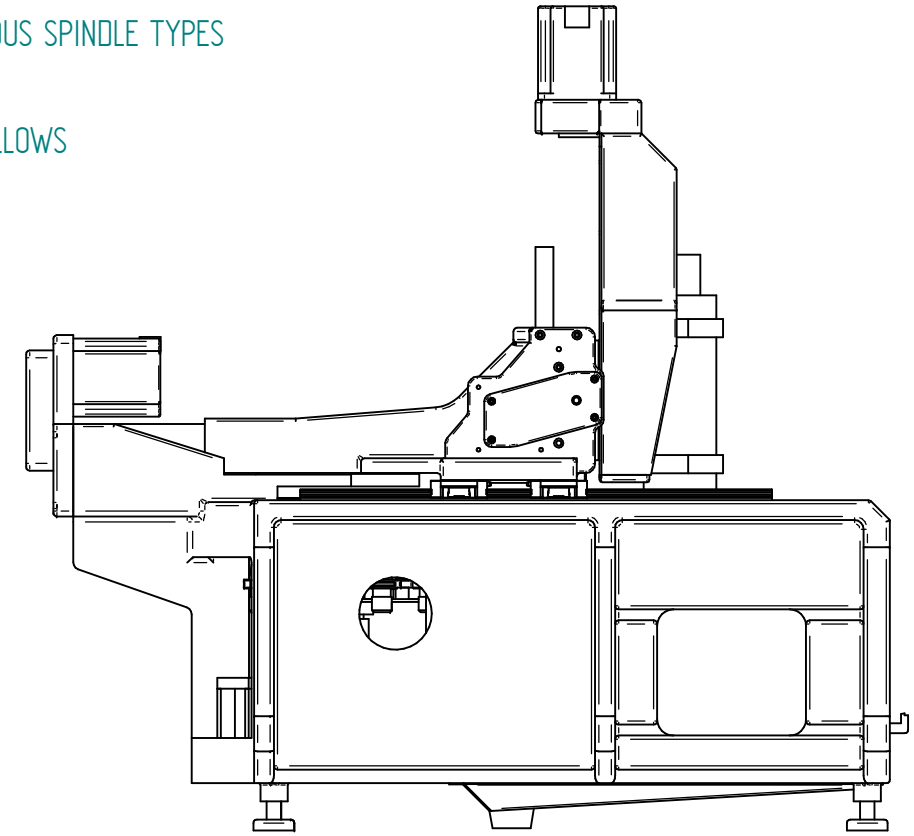

Coolant pan sloped to the rear

SIDE VIEW

Machine built from 4 castings in high quality SG42 cast iron.
Tensile strength 420 MPa (more than mild steel) and 12% ductility.
Castings stress relieved before machining.

Machine base: 120 kg, XY-axis frame 30 kg, Z-axis 9 kg, table 25 kg

Copyright 2018 RJduPreez rudy@asmsa.co.za

TITLE	MINI MILL	REV 7
FILE NAME: Mini-Mill-asm.dft		DRAWN RdP
SCALE:	WEIGHT:	SHEET 2 OF 7

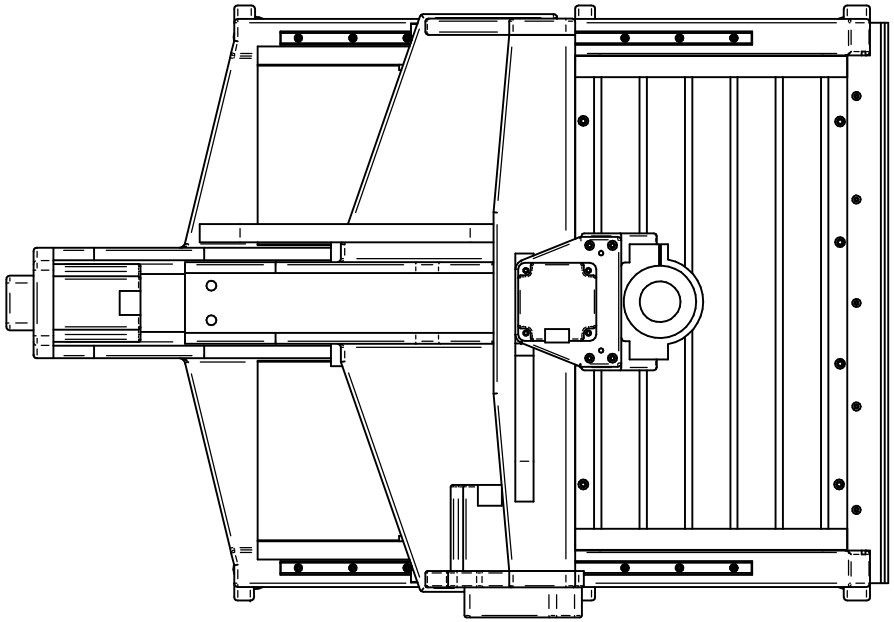

TOP VIEW

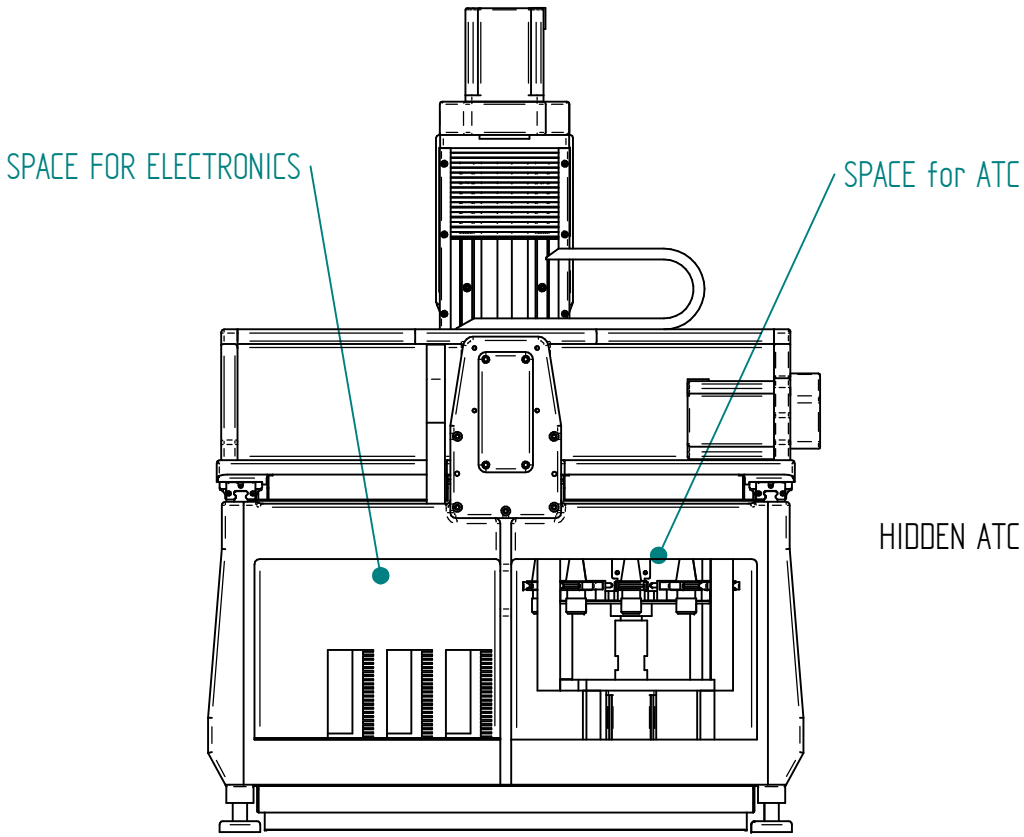

REAR VIEW

WORK AREA 400x300x200 mm

Copyright 2018 RJduPreez rudy@asmsa.co.za

TITLE	MINI MILL	REV 7
FILE NAME: Mini-Mill-asm.dft		DRAWN RdP
SCALE:	WEIGHT:	SHEET 3 OF 7

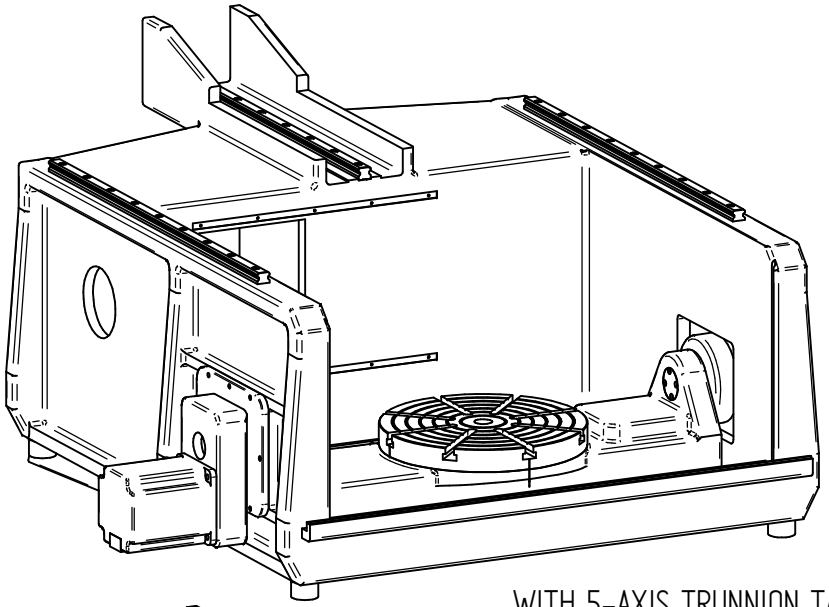

WITH 5-AXIS TRUNNION TABLE

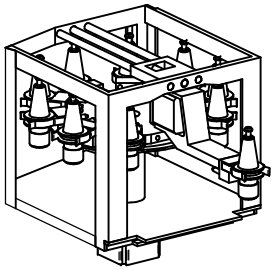

Space for 10 ISO20 tools

ATC unit that fits in from the back

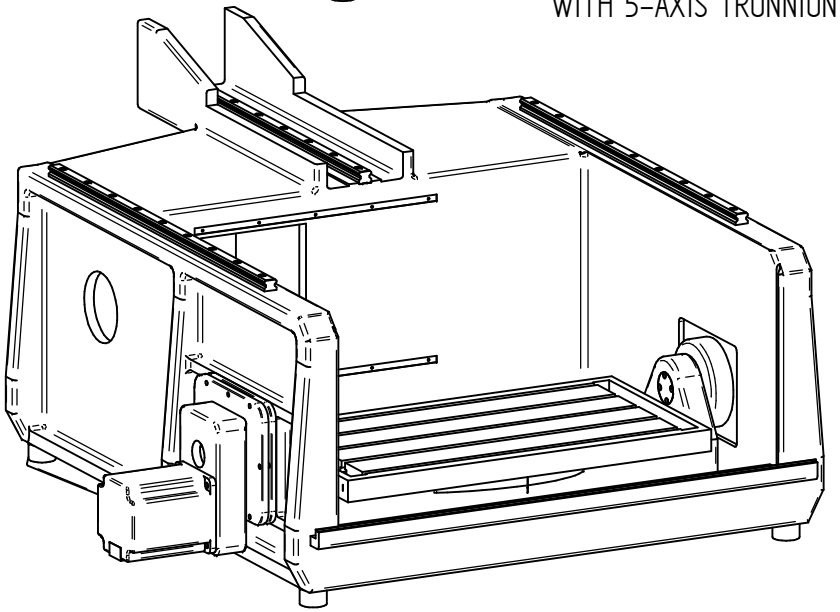

WITH 4-AXIS TRUNNION TABLE

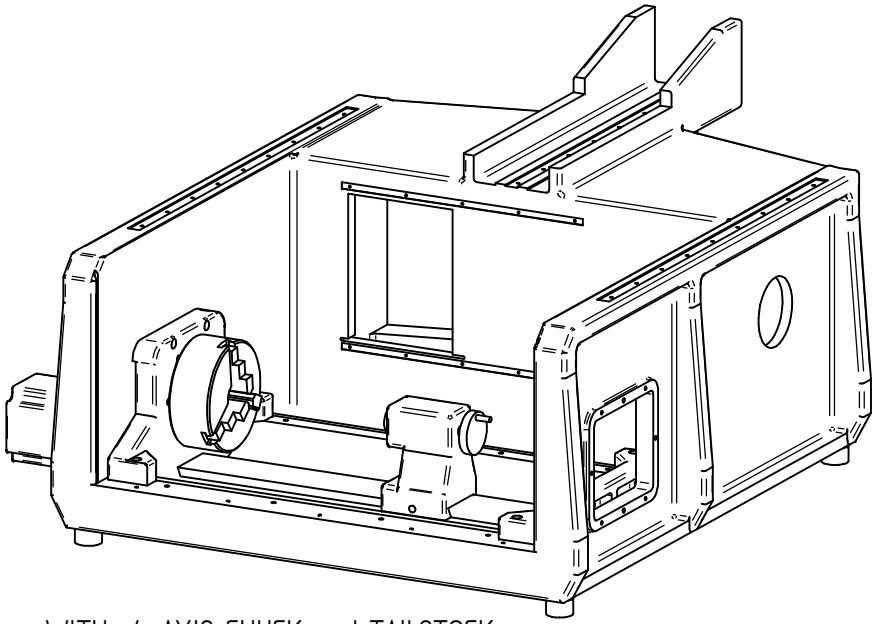

WITH 4-AXIS CHUCK and TAILSTOCK

(BASE ONLY)

Copyright 2018 RJduPreez rudy@asmsa.co.za

TITLE	MINI MILL	REV 7
FILE NAME: Mini-Mill-asm.dft		DRAWN RdP
SCALE:	WEIGHT:	SHEET 4 OF 7

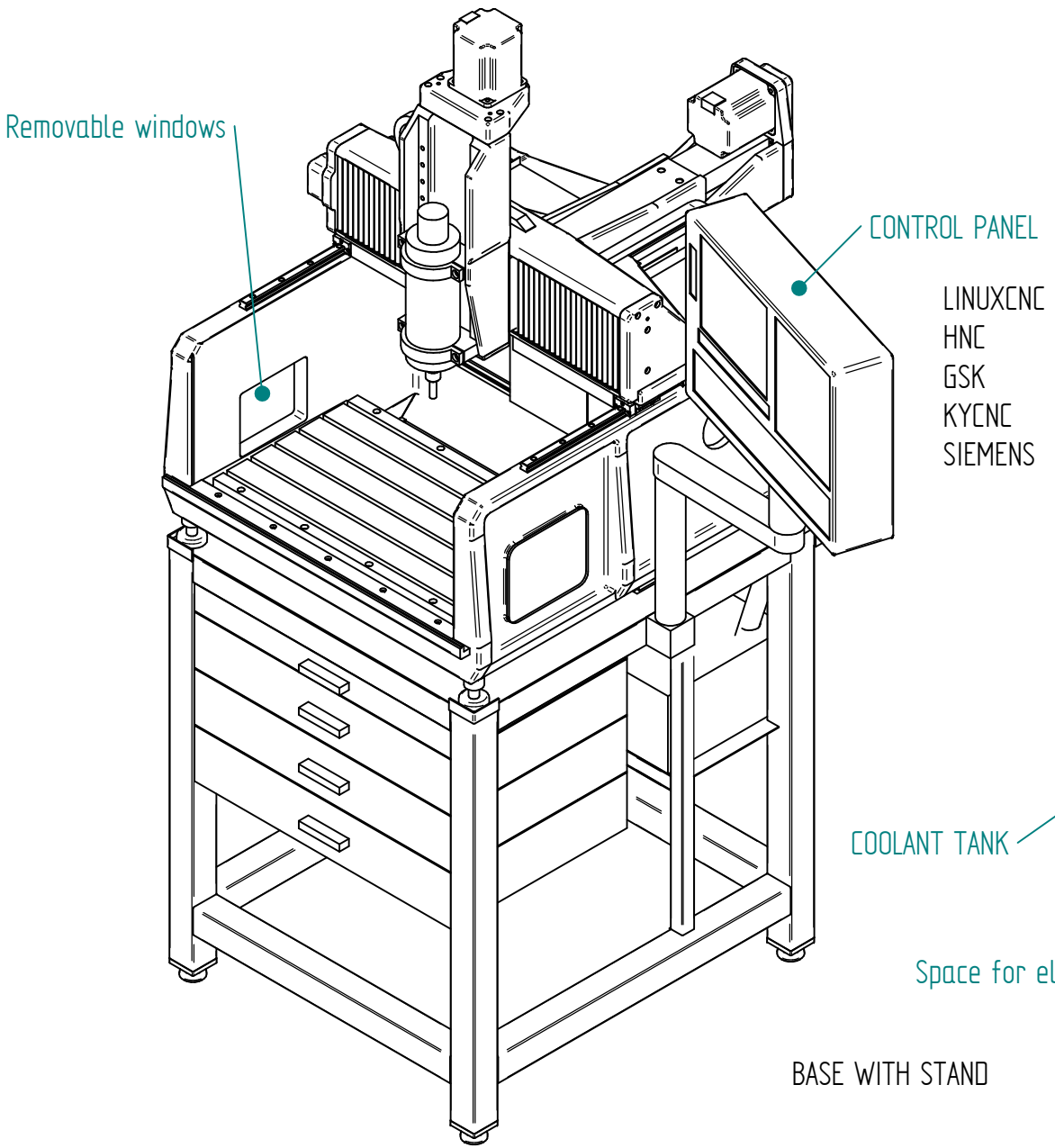

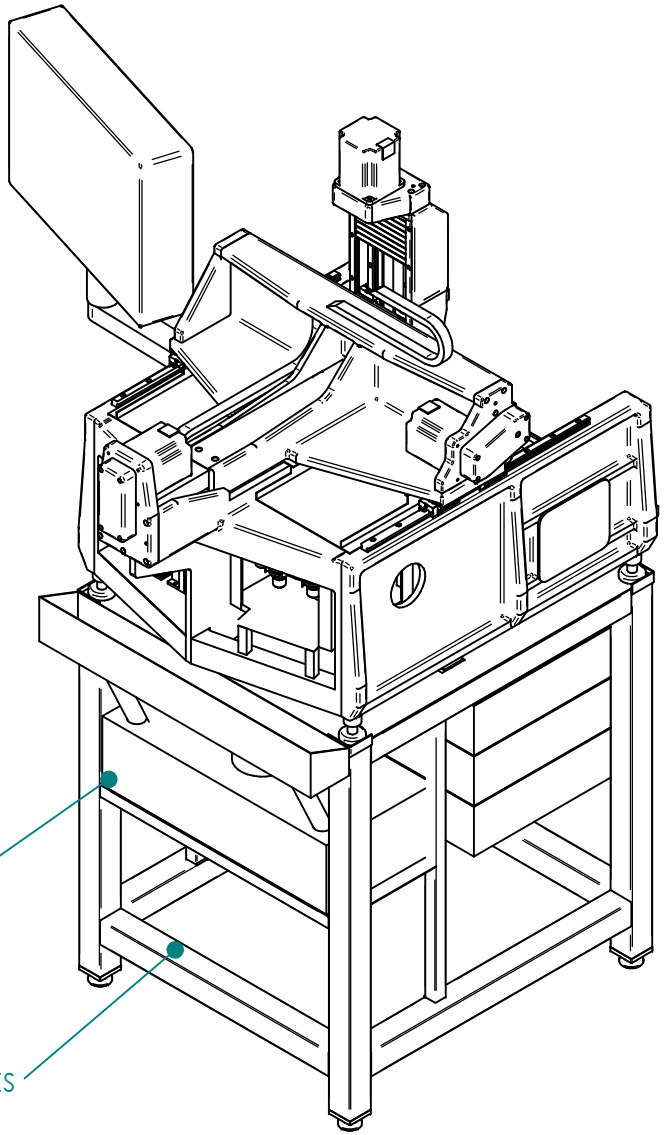

BASE WITH STAND

Copyright 2018 RJduPreez rudy@asmsa.co.za

TITLE	MINI MILL	REV 7
FILE NAME: Mini-Mill-asm.dft	DRAWN	RdP
SCALE:	WEIGHT:	SHEET 5 OF 7

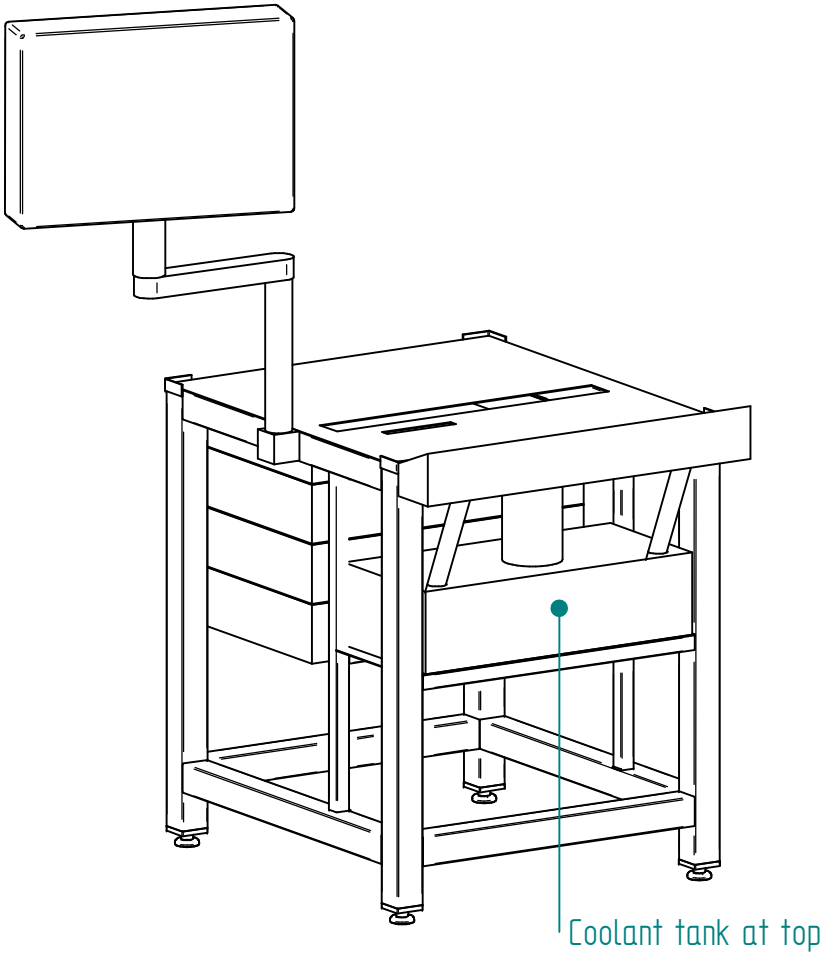

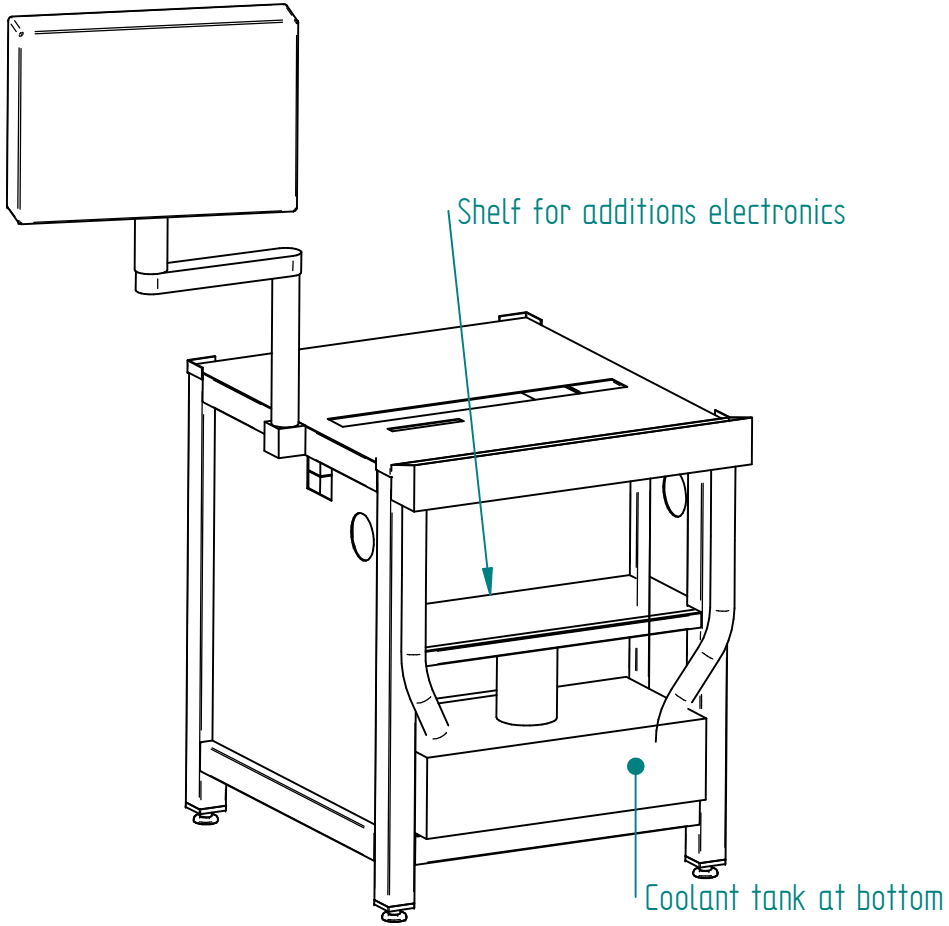

Alternative stand configurations

Copyright 2018 RJduPreez rudy@asmsa.co.za

TITLE	MINI MILL	REV 7
FILE NAME: Mini-Mill-asm.dft		DRAWN RdP
SCALE:	WEIGHT:	SHEET 6 OF 7

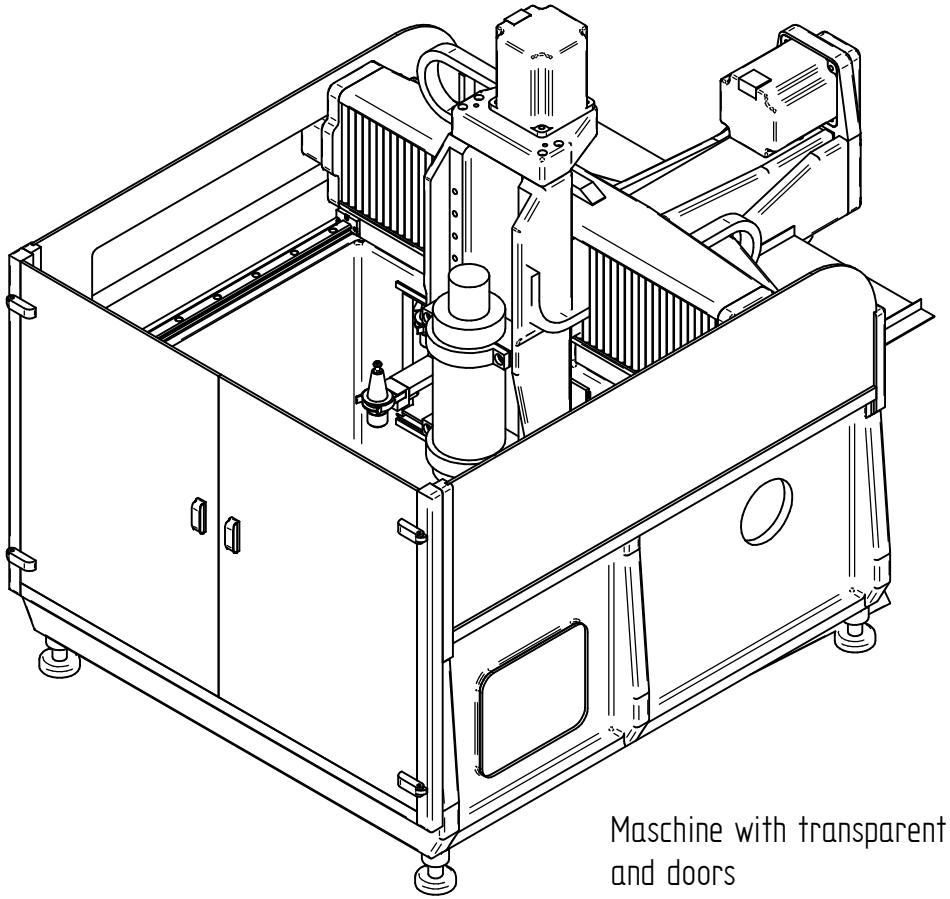

Maschine with transparent side covers
and doors

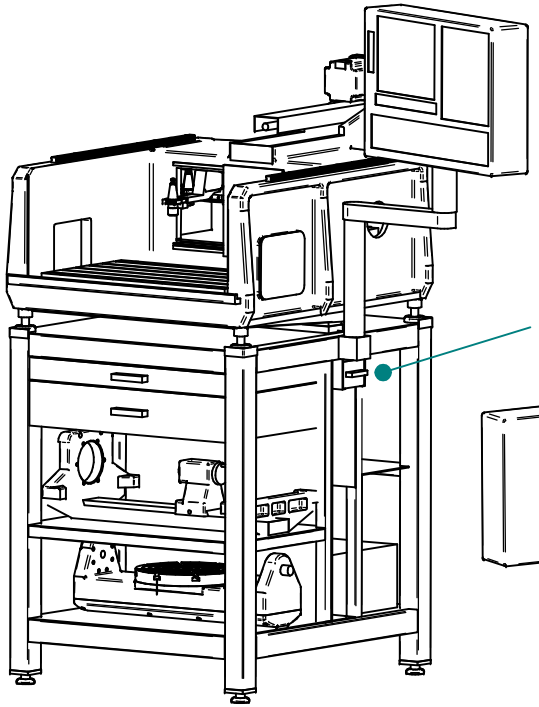

Stand with shelves for
accessory equipment
and electronics below

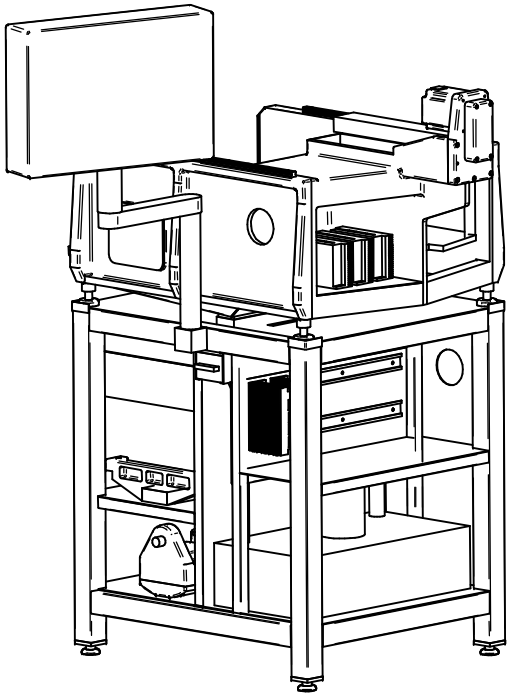

Copyright 2018 RJduPreez rudy@asmsa.co.za

TITLE	MINI MILL	REV 7
FILE NAME: Mini-Mill-asm.dft		DRAWN RdP
SCALE:	WEIGHT:	SHEET 7 OF 7